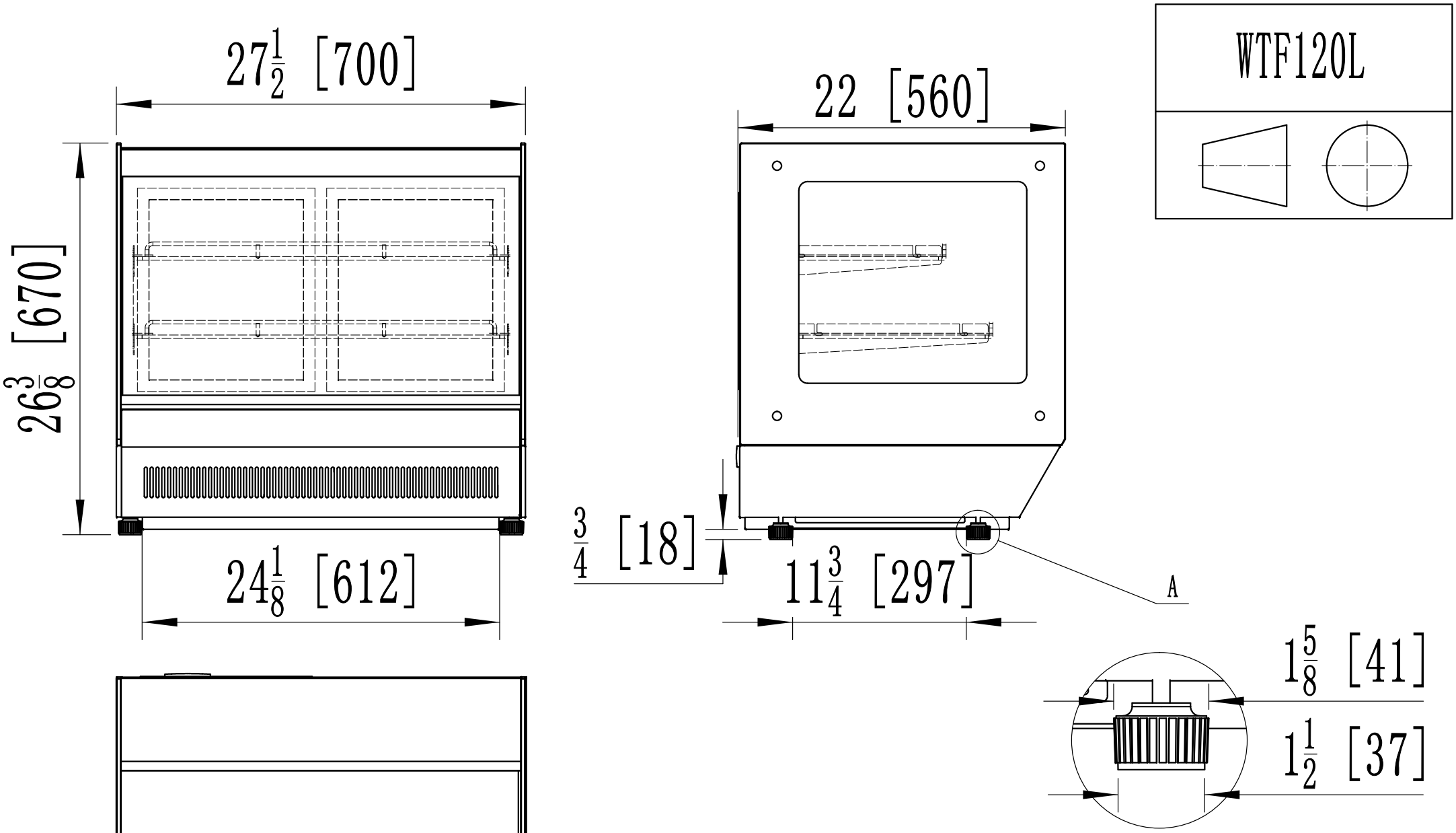
WTF120L
27 1/2 [700]
26 3/8 [670]
24 1/8 [612]
22 [560]
3/4 [18]
11 3/4 [297]
A
1 5/8 [41]
1 1/2 [37]